OPERA GENERAL INSTALLATION

OPAGL 65

IP20/IP44 CE

INSTALLATION INSTRUCTION

- Before installing the lighting fixtures, please read this instruction manual carefully.
- The lighting fixtures should be installed, connected and tested by a certified installer based on the local regulations.
- Lamps should always be installed or replaced with care.
- When a lamp is to be cleaned, switch off the fixture and let it cool down completely. Clean the fixture with a soft cloth and a standard PH neutral detergent. Stainless steel finishing should be maintained regularly.
- Misuse of, or changes to the fixture shall nullify the guarantee.
- This recessed luminaire shall under no circumstance be covered with insulating matting or similar material.
- This luminaire is IP 44, indoor use only.

A1 - Please pay attention to installing method and the spacing between parts, making appropriate holes according to the luminaire specifications.

A2 - Connect with power after power -off.

A3 - Put the fixture into the ceilling according to the sketches.
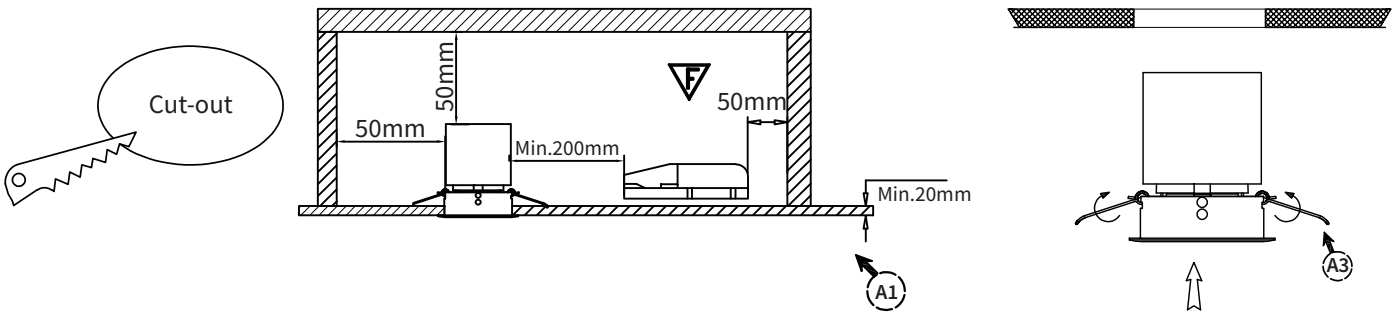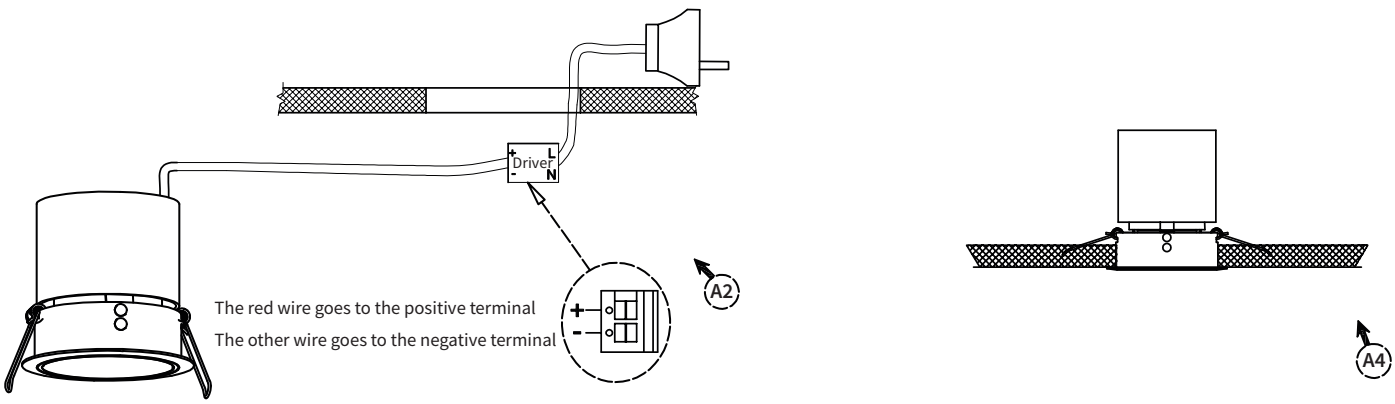
A4 - Finish lamp installation.